4114 Series Mounting and Dimensions

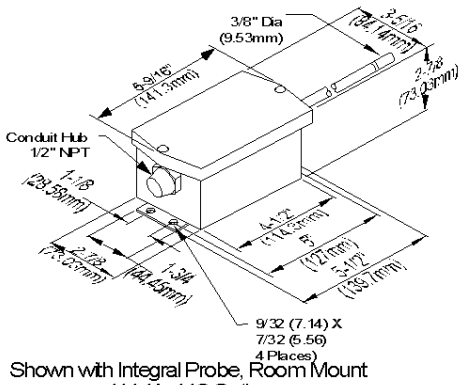

Shown with Integral Probe, Room Mount
4114A, 112 Option

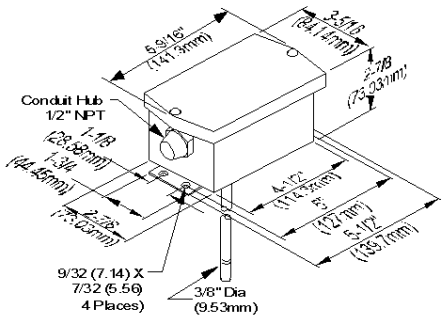

Shown with Integral Probe, Duct Mount
4114A, 111 Option

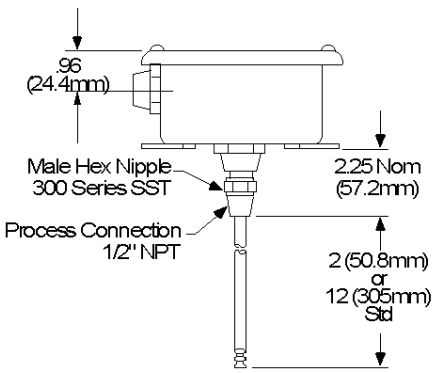

4114B, Side View