9411

Honeywell Inc.

UMC 800 Controller I/O

Analog Output 4 - 20 ma
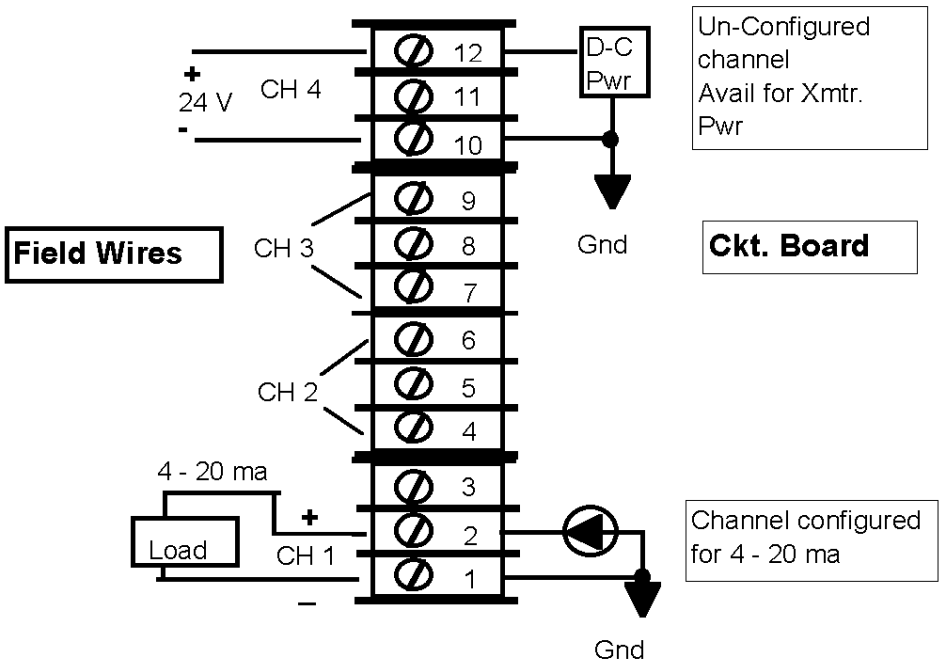
ID # 2 (# on terminal strip)
Term Color Black
Brd # 46190314-501
4 Channels